www.semetalgroup.com

# API 6A FLANGES 6BX 15000 PSI Weld Neck Flange and Blind Flanges Dimension

## API 6A - TYPE - 6BX 103.5 MPA (15000 PSI)

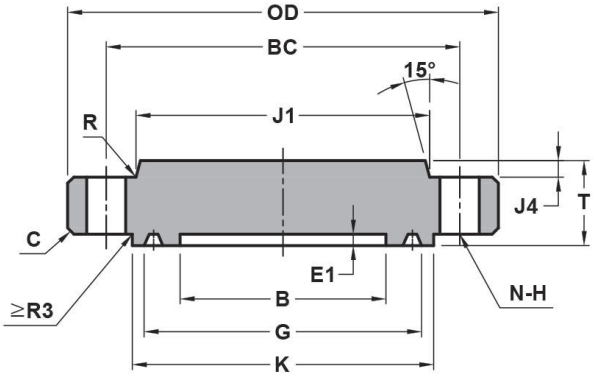


BLIND RTJ

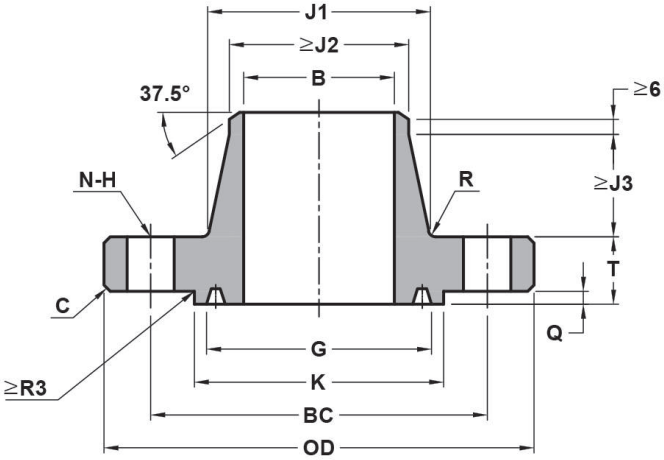


WELDING NECK RTJ

UNIT : mm

| Size | B | OD | C | E1 | Q (MAX.) | G | K | T | J1 | J2 | J3 | J4 | R | BC | N | H | Ring Number |
|---|---|---|---|---|---|---|---|---|---|---|---|---|---|---|---|---|---|
| | | | | | | | | | | | | | | | | | BX |
| 1 13/16″ | 46.8 | 210 | 3 | - | 5.56 | 77.77 | 106 | 45.3 | 97.6 | 71.4 | 47.6 | - | 10 | 160.3 | 8 | 26 | 151 |
| 2 1/16″ | 53.2 | 220 | 3 | - | 5.95 | 86.23 | 114 | 50.8 | 111.1 | 82.5 | 54.0 | - | 10 | 174.60 | 8 | 26 | 152 |
| 2 9/16″ | 65.9 | 255 | 3 | - | 6.75 | 102.77 | 133 | 57.2 | 128.6 | 100.0 | 57.1 | - | 10 | 200.00 | 8 | 29 | 153 |
| 3 1/16″ | 78.6 | 290 | 3 | - | 7.54 | 119.00 | 154 | 64.3 | 154.0 | 122.2 | 63.5 | - | 10 | 230.20 | 8 | 32 | 154 |
| 4 1/16″ | 104.0 | 360 | 3 | - | 8.33 | 150.62 | 194 | 78.6 | 195.3 | 158.7 | 73.0 | - | 10 | 290.50 | 8 | 39 | 155 |
| 5 1/8″ | 131.0 | 420 | 3 | 9.5 | 9.53 | 176.66 | 225 | 98.5 | 244.5 | 200.0 | 81.8 | 6.4 | 16 | 342.90 | 12 | 42 | 169 |
| 7 1/16″ | 180.2 | 505 | 6 | 11.1 | 11.11 | 241.83 | 305 | 119.1 | 325.4 | 276.2 | 92.1 | 7.9 | 16 | 428.60 | 16 | 42 | 156 |
| 9 ″ | 229.4 | 650 | 6 | 12.7 | 12.70 | 299.06 | 381 | 146.1 | 431.8 | 349.2 | 123.8 | 14.2 | 16 | 552.40 | 16 | 51 | 157 |
| 11″ | 280.2 | 815 | 6 | 14.3 | 14.29 | 357.23 | 454 | 187.4 | 584.2 | 427.0 | 235.7 | 12.7 | 16 | 711.20 | 20 | 54 | 158 |
| 13 5/8″ | 346.9 | 885 | 6 | 15.9 | 15.88 | 432.64 | 541 | 204.8 | 595.3 | 528.6 | 114.3 | 17.5 | 25 | 771.50 | 20 | 61 | 159 |
| 18 3/4″ | 477.0 | 1160 | 6 | 18.3 | 18.26 | 577.90 | 722 | 255.6 | 812.8 | 730.2 | 155.6 | 35.1 | 25 | 1016.00 | 20 | 80 | 164 |

NOTE :
1) TOLERANCE ACCORDING TO API 6A-20TH
2) RING GASKET ACCORDING TO API 6A-20TH